How To Build
Decorative

Timber Awnings

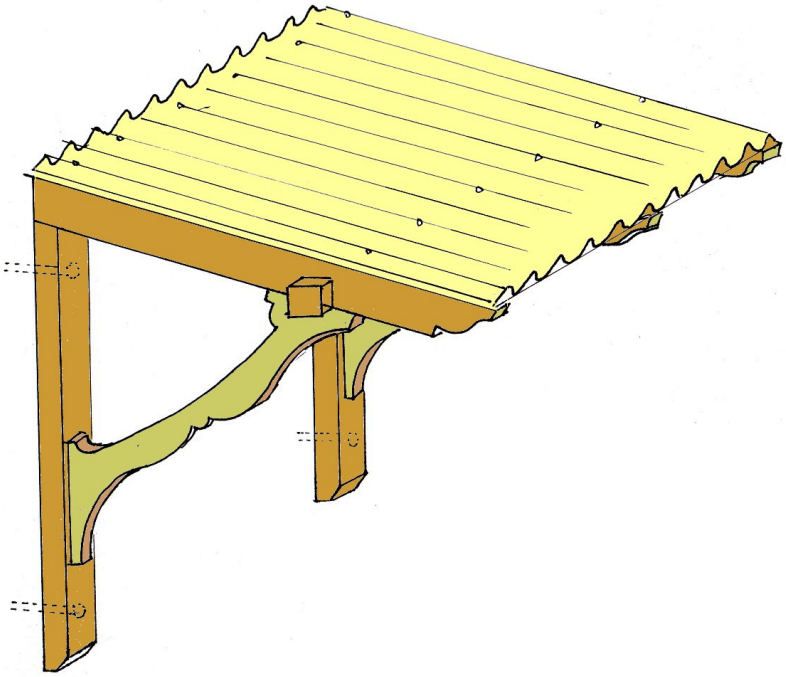

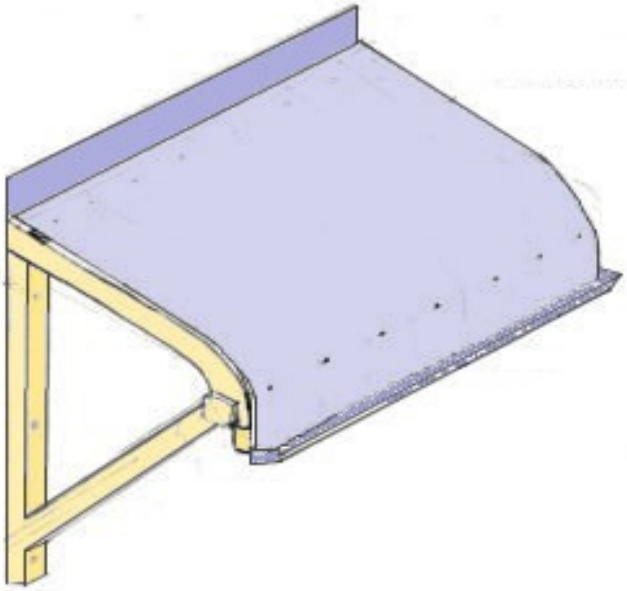

How to build a timber awning

FOREWORD

Timber awnings are a visually pleasing form of window shading. Properly built timber awnings can add value to your property as well as solving issues such as shading, privacy, insulation etc.. To design an awning that is complimentary to your home is a matter of looking at the features present in your home and trying to replicate them to enhance the overall property appearance.

In this guide we examine two different awning designs and explain the principles behind construction in our step by step easy to follow guide.

ALL DAY FENCING – CONSTRUCTION GUIDE

How to build timber awnings.

Step 1

The size of the window or opening that the awning is intended for will dictate the size required. Measure the width of the window opening, and add 20mm so that the frame of the awning finishes 10mm from the opening at either side.

The first step is to cut and fix a 'wall plate' above the window. Cut a piece of 90mm x 45mm treated pine to the width of the window, plus 200mm. (the side plates are to be cut over the top wall plate. If each side measures 90mm wide then two of these plus 20mm for clearance equals 200mm).

Fix the wall plate using three 100mm x 10mm dynabolts drilled into the brickwork above the window.

Step 2

Cut the side wall plates. The wall plates must be deep enough to take the angle brackets. The length of the rafters and the width of the window will dictate this. If unsure, leave the side plates a bit longer than required and trim later. The wall plates must then be fixed plumb, and flush with the end of the top wall plate.

Step 3

Cut the rafters out of 140mm x 45mm treated pine. The rafters should be spaced at maximum 900mm centres, so divide the length by 900, add one for the end and cut the rafters. Using the templates below, choose an end cut design and cut using a jigsaw.

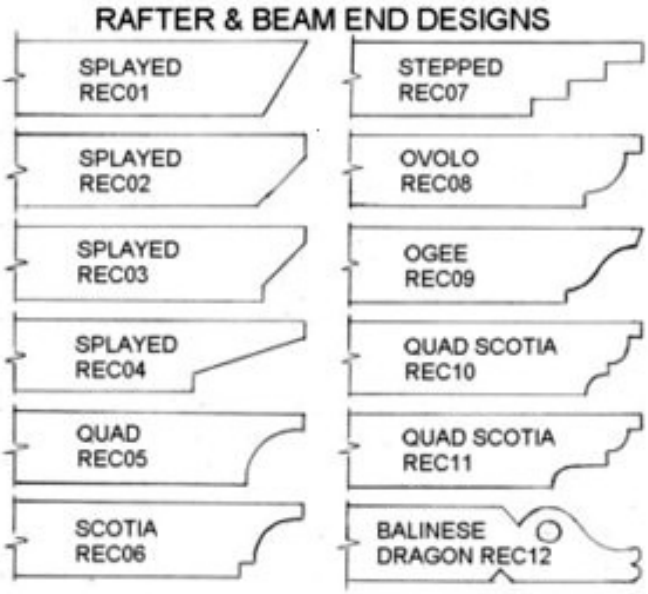

Use the first rafter cut as a template to mark the others. Once the end of the rafters have been cut, they can be cut to length. The length is dependant on the cover required. For most windows 900mm to 1200mm is standard, but it is a matter of trial and error to get the awning to suit the home and provide the required shading. The direction the window faces may dictate the size of the awning required due to the angle of the sun.

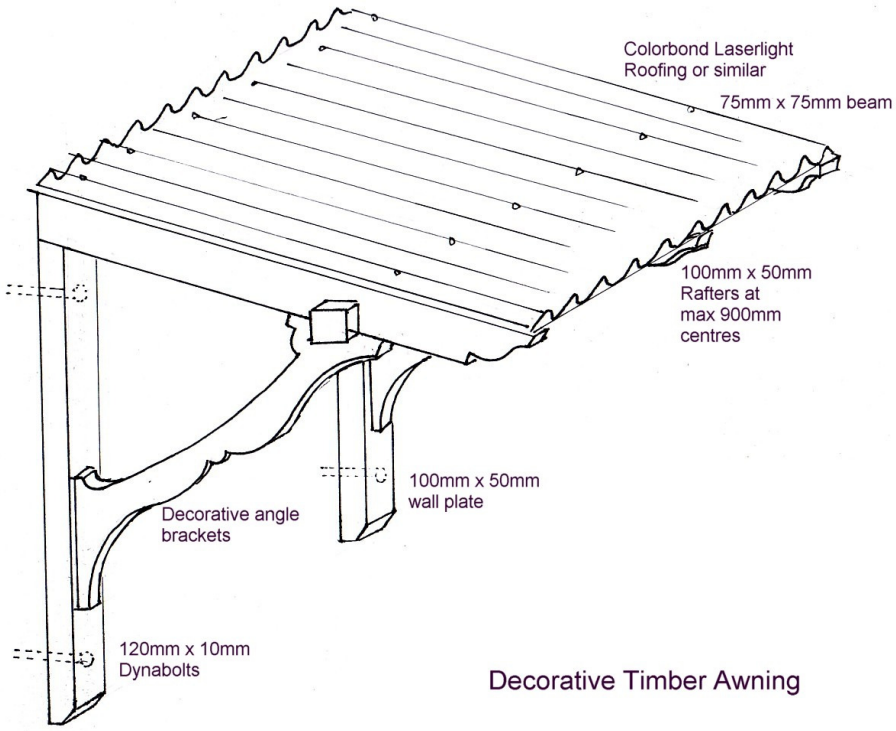

Decorative Timber Awning

The rafters should be installed at a minimum of 4 degree slope for colorbond or metal roofing and a minimum of 15 degrees for tiles or slates. For this example we will be using colorbond roofing and will work to a 4 degree pitch. Measure the length of the rafters required and cut a 4 degree angle on the end. This will butt into the wall. Use the first rafter cut as a template to mark and cut the remaining ones.

Step 4

Cut the angle brackets. Choose a design from the illustration below or design your own! Take a feature already present in your home and replicate this as an angle bracket.!

2 decorative brackets will need to be cut using a jigsaw. The brackets below are cut from 240mm x 35mm treated pine.

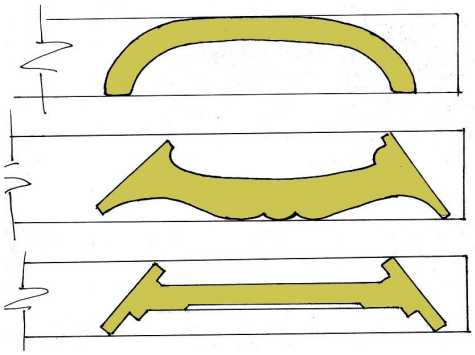

Step 5

Assembling the awning. Once the top and side wall plates are fixed in position, a side bracket and rafter can be carefully assembled. A vertical prop or extra hand will be needed for this stage.

Rest the end of the rafter on the top wall plate, and hold a side bracket up to the bottom of the rafter end. Temporarily nail the bracket to the side plate and to the rafter. The back end of the rafter that meets the wall can be temporarily tacked to hold one side together.

Step 6

Cut a 70mm x 70mm treated pine beam to the length of the awning. This beam must be fixed to the top of the side brackets to support the rafters. A notch will have to be cut into the ends of the beam and into the rafters, so that the rafters lock on to the beam and the beam is supported by the side brackets. See pic.

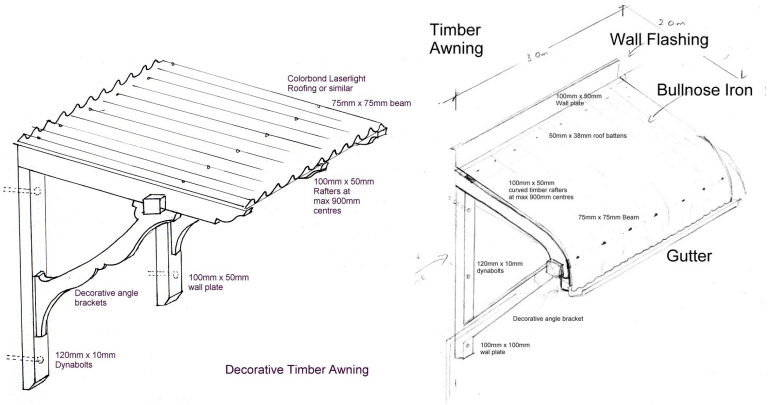

For larger awnings, the beam size may be increased to 90mm x 70mm. For bullnose awnings, the rafters will have to be cut to the shape of the curved roofing. It is best to order the bullnose iron first and then cut the curved rafters to suit. The construction of bullnose awnings differ slightly from flat roofed awnings. Due to the bullnose roofing, the height of the side brackets will need to be longer than with a flat roof.

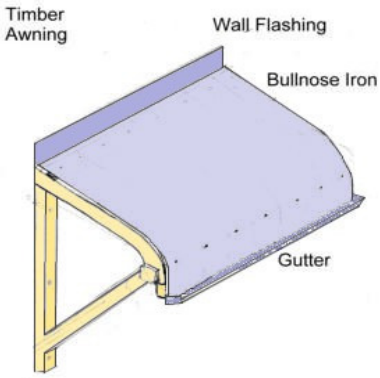

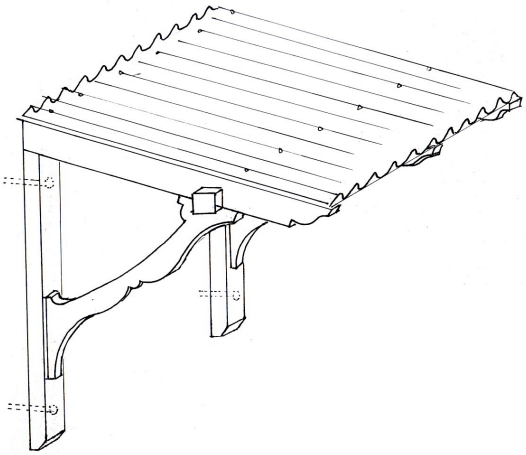

Step 6

To assemble the structure use 90mm galvanised screws to securely fix the side brackets to the side wall plates. These can be dowelled for extra strength if required. Be careful to use waterproof external paintable glues such a ‘liquid nails’ or ‘maxbond’.

Corrugated colorbond roofing comes with a protective plastic film which should not be removed until all construction and painting has been completed.

Step 7

The roofing can be sealed to the wall above the window using clear silicone after the plastic film has been removed and the awning is painted.

Happy Building!!!

Any questions please email on sales@alldayfencing.com.au