How To Build A...

CNC ROUTER

by

Richard Berckelman
Master Builder BL Qld NSW

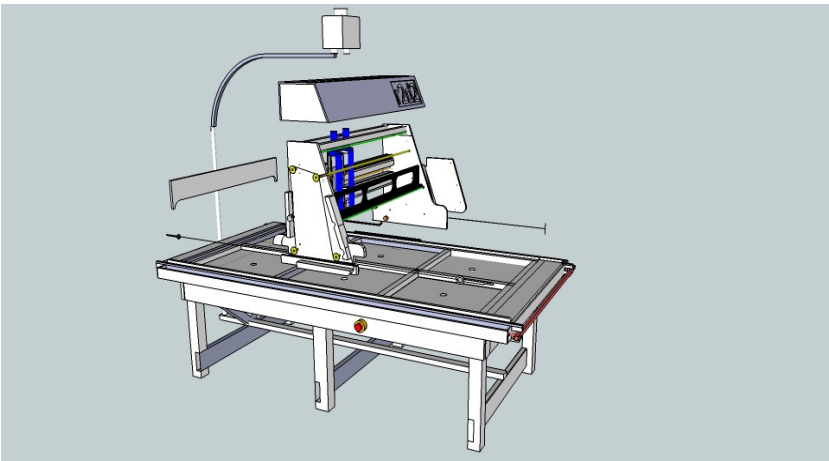

Contents

What is a CNC machine? (wikipedia)

Numerical control (**NC**) refers to the automation of machine tools that are operated by abstractly programmed commands encoded on a storage medium, as opposed to manually controlled via handwheels or levers, or mechanically automated via cams alone. The first NC machines were built in the 1940s and 1950s, based on existing tools that were modified with motors that moved the controls to follow points fed into the system on punched tape. These early servomechanisms were rapidly augmented with analog and digital computers, creating the modern **computer numerical control** (**CNC**) machine tools that have revolutionized the manufacturing process.

In modern CNC systems, end-to-end component design is highly automated using computer-aided design (CAD) and computer-aided manufacturing (CAM) programs. The programs produce a computer file that is interpreted to extract the commands needed to operate a particular machine via a postprocessor, and then loaded into the CNC machines for production. Since any particular component might require the use of a number of different tools-drills, saws, etc., modern machines often combine multiple tools into a single "cell". In other cases, a number of different machines are used with an external controller and human or robotic operators that move the component from machine to machine. In either case, the complex series of steps needed to produce any part is highly automated and produces a part that closely matches the original CAD design.

CNC BASICS

A CNC machine is probably the most useful tool a hobbyist can own, but the price for a CNC machine on the market is way more than the average hobbyist is willing to spend. Build your own CNC explains how to build, program and manufacture your own products on your own machine.

There are 3 steps to the project, Construction, Software, Manufacture.

Firstly the Construction.

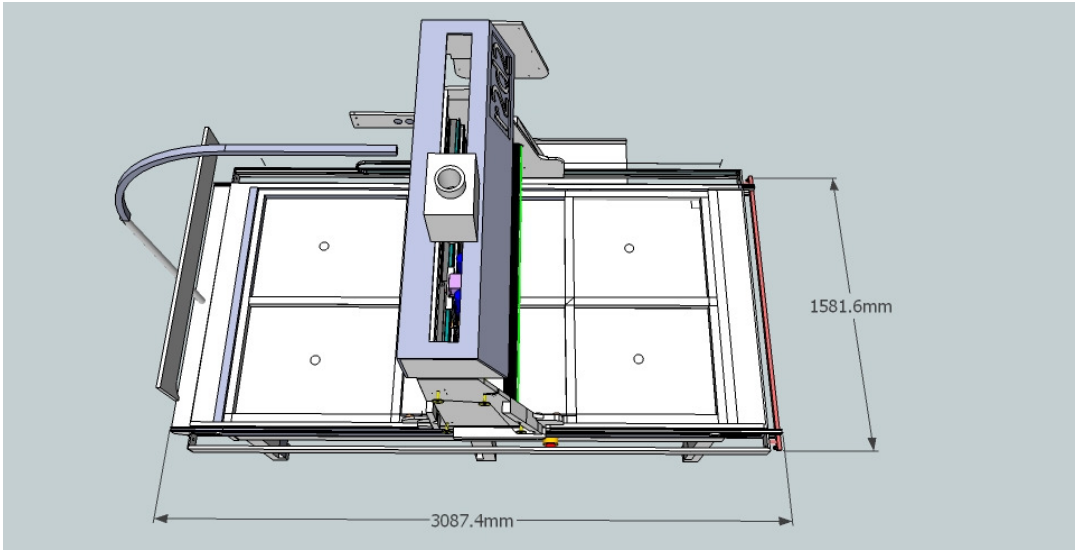
1581.6mm
3087.4mm

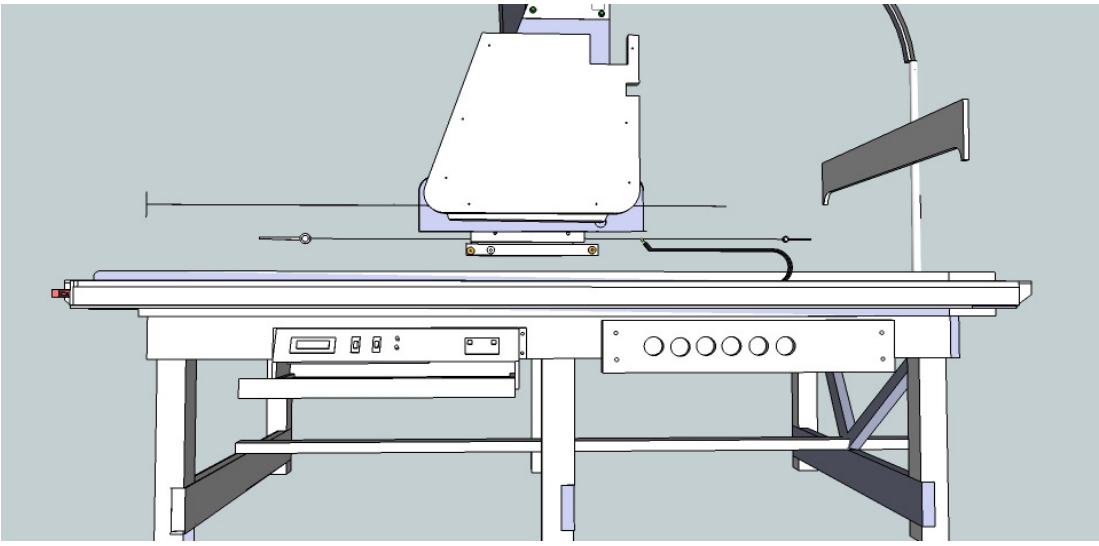

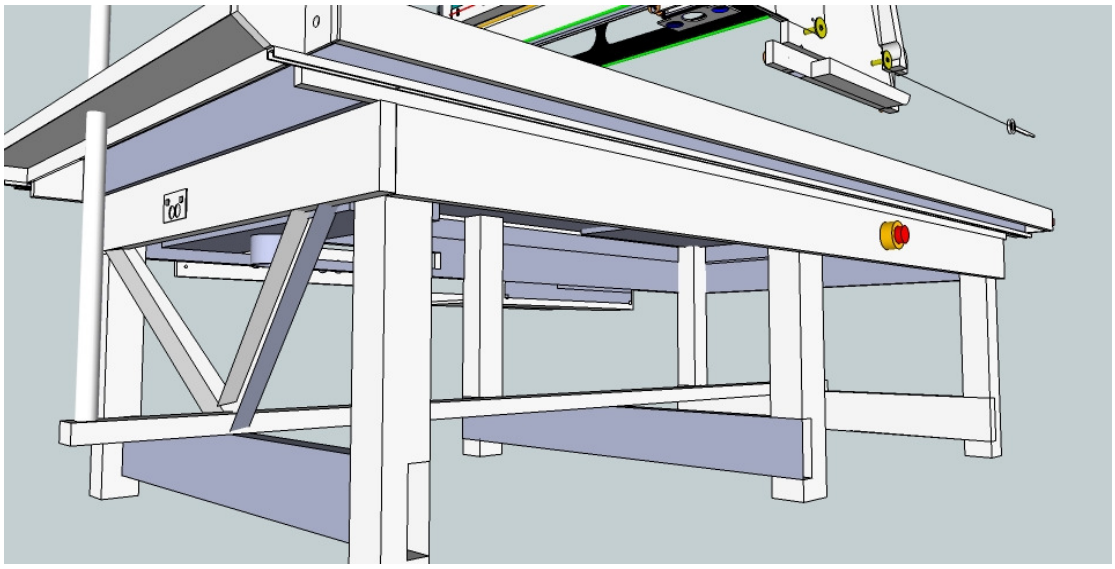

LINEAR MOTION

A CNC machine has three axis. The X, Y and Z. These represent the worktable. The x axis is the movement in the direction of the length of the table. The Y axis is width and the Z is vertical movement. When a CNC machine works the computer instructs the cutting bit to move in all 3 axis.

Our plan uses V shaped rollers for all three axis. A total of 16 rollers is required for the whole machine. 8 rollers are required for the axis, and 4 rollers for both the Y and Z axis. The rollers run on the edge of aluminium channel or aluminium plate as shown in the drawings.

These are specialized bearings that are used in many linear motion systems. The v-groove bearings generally ride on a rail or track. Purchase these bearings from:
http://buildyourcnc.com/bearingsproducts.aspx.

The first step to construction is to cut the timber and aluminium support rails as shown in the plan below. The rails are constructed from 140mm x 40mm primed and treated pine. A rebate 16mm x 16mm is cut into both edges of the timber to allow for the aluminium channel.

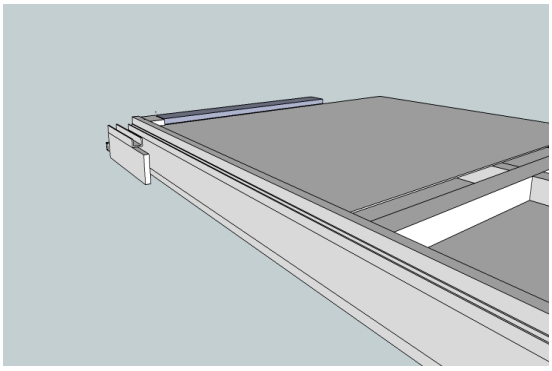

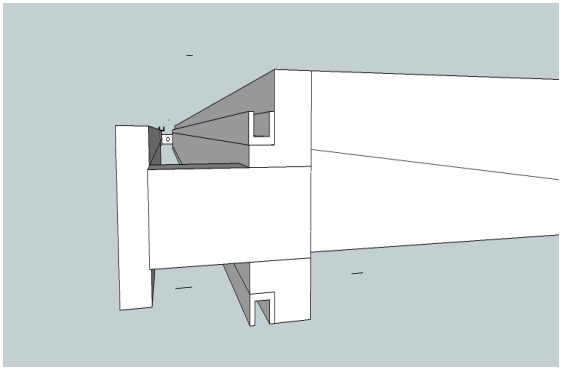

Fix the rails to a steel or timber frame ensure that the rails are parallel and a firm fit with no movement. Provide two end beams to tie the structure together. See Diagram

The picture above shows the rails and a tensioning bar for the chain.

Construct the Gantry

The gantry is the moving part of the machine that will slide along the x axis. Use either 22mm thick exterior plywood with minimum flex for the side panels. Use two lengths of 70mm x 40mm timber with a 50mm space between for the frame of the gantry. Rebate the sides of the timber to screw the aluminium channel on. Use 4, 10mm threaded rods to attach the gantry sides to the frame. See Drawing

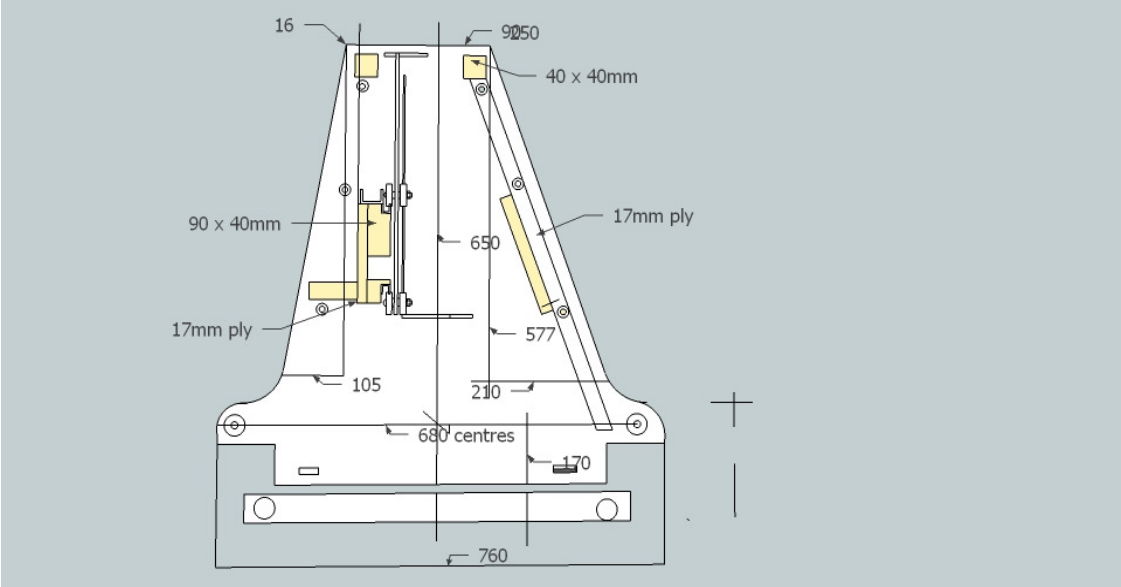

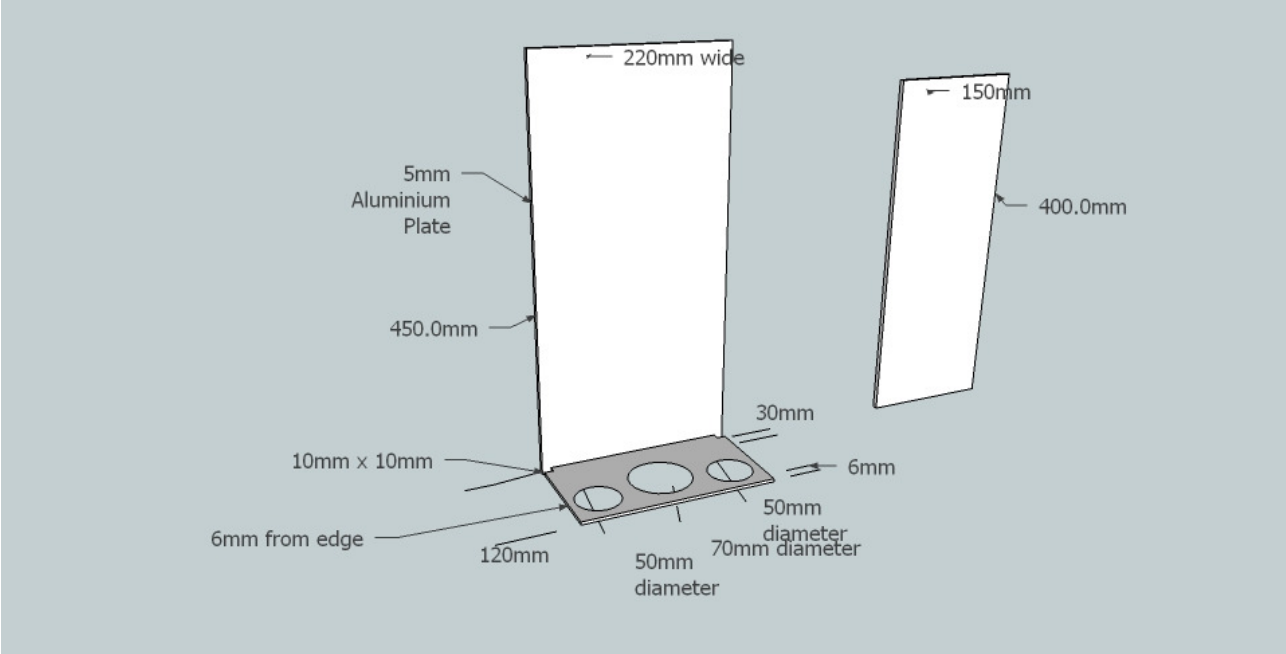

The Y axis represents the sideways movement. The Z axis represents the up and down movement. Use a 5 mm aluminium plate with 4 V rollers for the Y axis. See drawing..

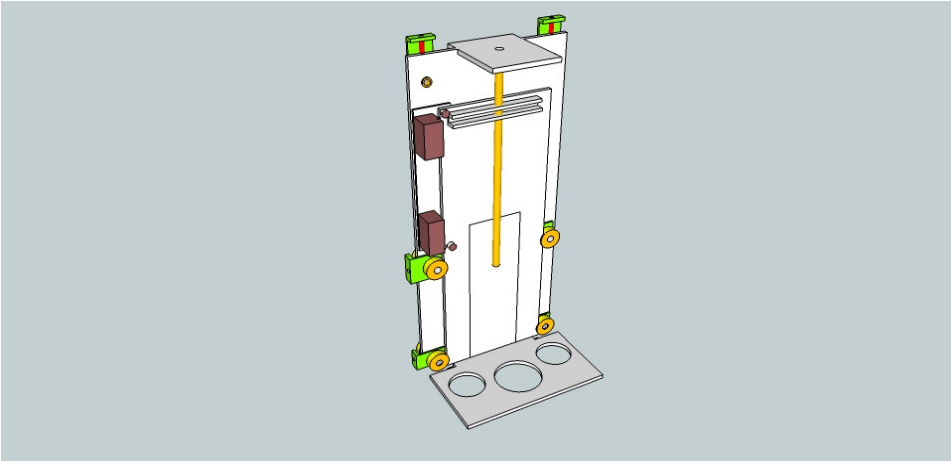

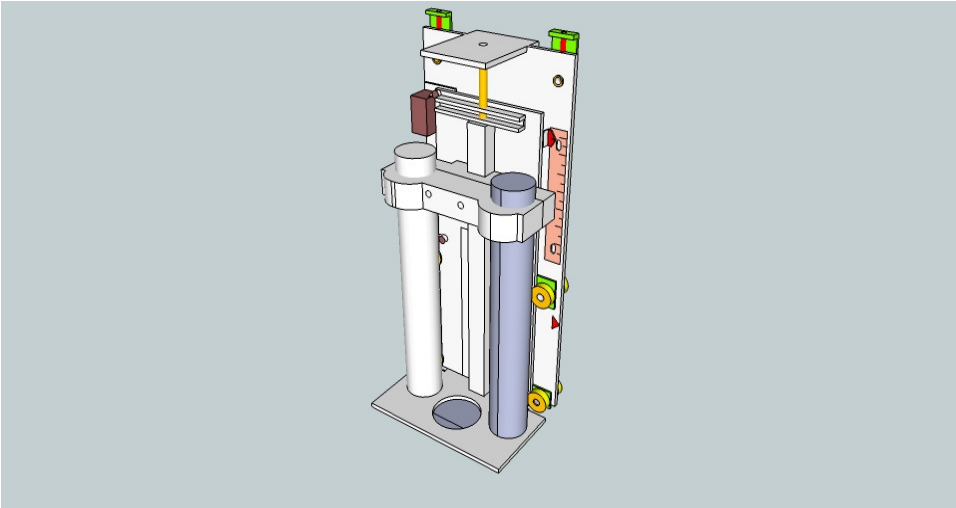

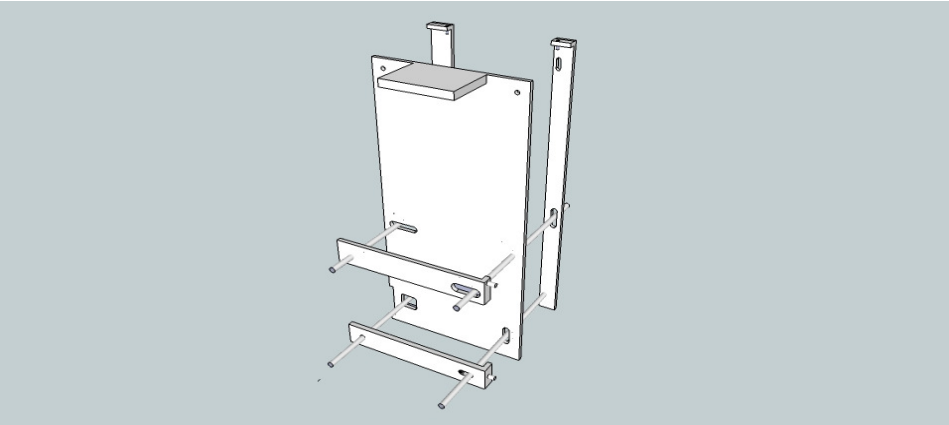

Use another 5mm aluminium plate for the support for the router together with 4 V rollers for the movement. An air extraction system can be included in the aluminium plate. See drawing...

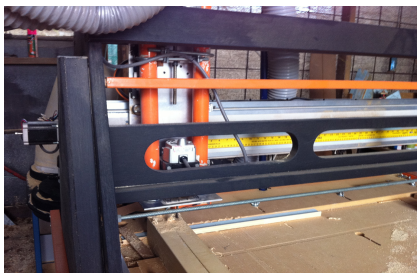

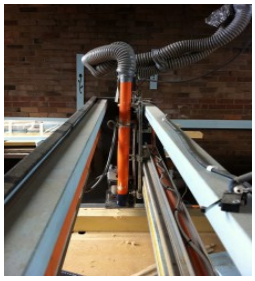

Construct all axis so the rollers can be adjusted as the table settles or wears. The diagram below shows how with the use of 30mm wide aluminium straps and a drill, you can make a fully adjustable Y and Z mount.

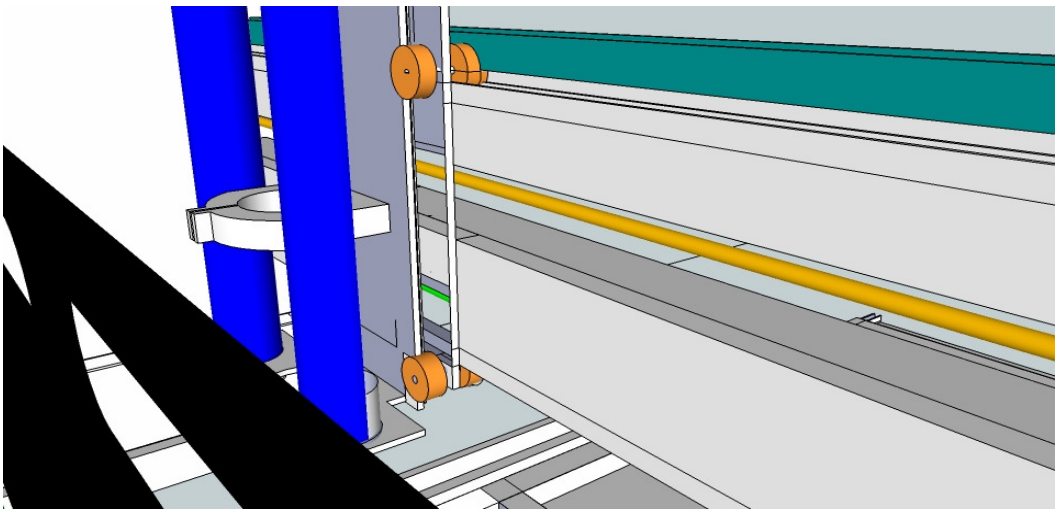

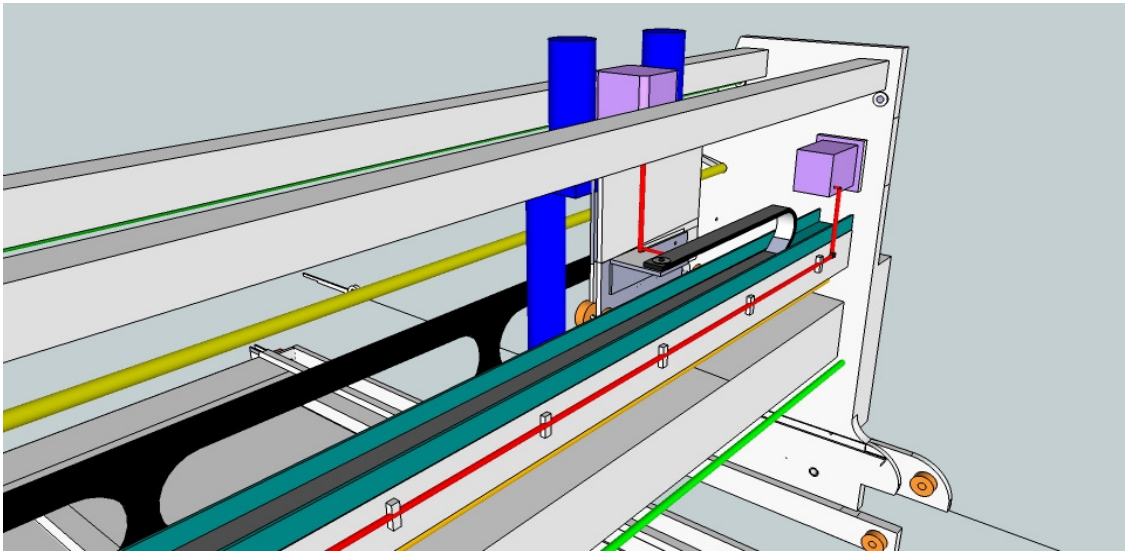

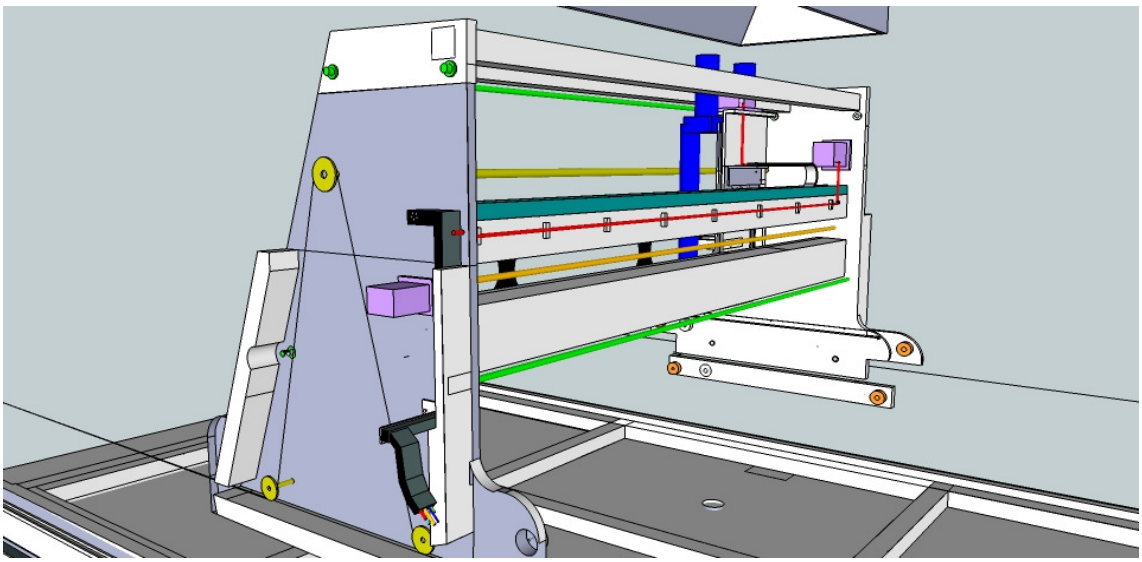

DRIVE SYSTEM

The X axis uses a #25 chain and sprocket drive. These items can be purchased here..
http://buildyourcnc.com/CNCMachineMechanicalParts.aspx.
The chain needs to run the length of the axis on both sides including around the sprockets as shown below..

Pic 6

Use a #25 drive sprocket to connect the motor to the drive sprocket. The Y axis can be driven by chain and sprocket or threaded rod. Use anti backlash nuts for threaded rods to eliminate movement.
Join each side of the gantry power drive with a piece of 20mm square steel. Weld a bolt to each end and suspend from side to side on bearings. See picture

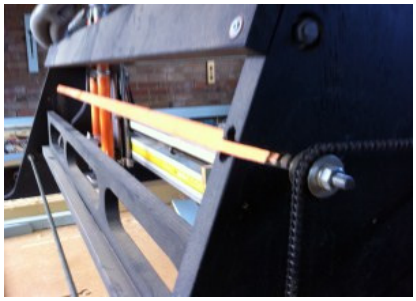

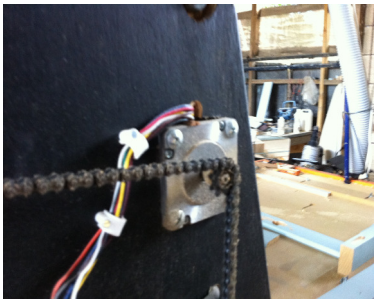

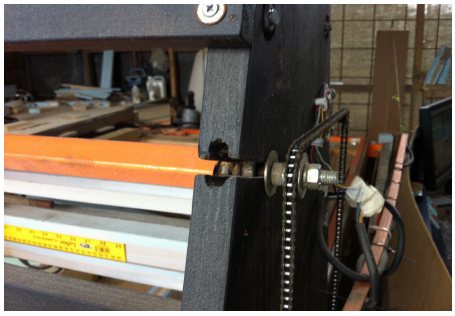

MOTORS

Wow, big learning curve! I purchased 2 lots of motors before I realised the size and strength of the motors I needed. In the end I used the 463oz motors to power all three axis. The motors are quite and strong enough to cut most materials (including aluminium) and will give years of trouble free operation. You will also need 3 drivers a power supply and a breakout board.

Here are the electronics that you will need to make the CNC Router move!

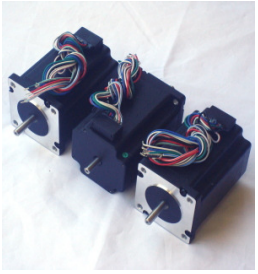

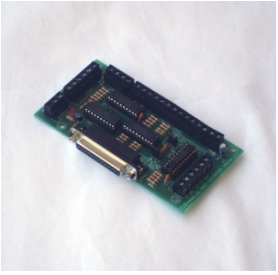


You can purchase a bundle of components including three stepper motors, three stepper motor drivers, a power supply, and a breakout board (fan is not included but is recommended if the system is enclosed) here.. http://buildyourcnc.com/electronicscombo.aspx.

MOUNTING THE MOTORS



Attach the lead screw to the motor shaft using flexible connectors. These connectors correct the alignment of the motor to lead screw at the same time as reducing vibration. Connectors can be purchased from: http://buildyourcnc.com/couplings.aspx.

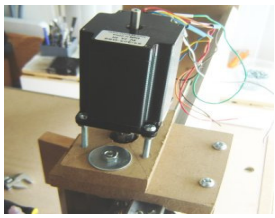
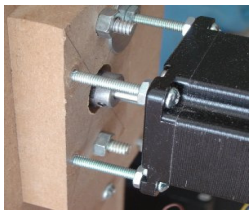

The motors can be mounted on bolts to provide clearance for the connectors as shown.

ELECTRONICS

Most of the tutorials on this site are created in response to the difficulties users have with machines mechanics, structural dimensions and the electronics that drive their CNC machines. Overwhelmingly, the electronics pose the most difficulty with new users. For an easy to follow wiring demonstration view the videos available here; http://buildyourcnc.com/CNCElectronicsandWiring.aspx.

The installation video explains the wiring instructions that demonstrate a methodology that begins with a simple and straightforward wiring of only one driver and motor and follows with the remaining drivers while testing throughout. The steps per inch for many forms of mechanical option are also explained in depth.

SOFTWARE

After months of reviewing software options, (there are over 60 options) including the 'miss' purchase of several programs that were not compatible, I have finally worked out the cheapest, easiest and best software.

The software toolchain can contain three software applications.

Firstly, a drawing program such as Auto CAD that can manufacture 3D drawings, second, a program that can convert the drawing into a toolpath, CAM, and thirdly software to convert the toolpath into mechanical motion. Sound complicated? Well it is up until now!

AutoCAD retails for thousands of dollars, CAM programs start at around $1000 and most do not satisfactorily work. The final program will cost around $300 but you can get a FREE trial to test your system.

So all up, with the information in this manual you can download and start manufacturing FREE!!!

Software Explained. What to use...

Use Google Sketchup to draw your designs in 3D. Google sketchup is free. Download the following software and save to your computer.

Download: http://sketchup.google.com/intl/en/product/newin8.html
copy and paste the above address into your browser.

Make and name a new folder on your desktop for the Sketchup files you create, choose save as from the menu to save your sketchup drawings to your computer.

After drawing your designs in Google Sketchup they have to be converted to DXF files to be read by the CAM program. Google Sketchup does not allow export of DXF files normally. If you download and add the following file to your 'Plugins' file under Google Sketchup.

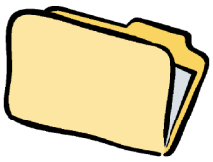

Sketch up to DXF, STL Plugin: http://www.guitar-list.com/download-software/convert-sketchup-skp-files-dxf-or-stl

Make and name a new folder on your desktop for the DXF files you create.

CAM program.

The CAM program can read your exported DXF files. DXF files contain the 3D information of your exported drawing. I have tried many CAM programs and they all have their limitations. The most expensive is not necessarily the best. In my opinion, the easiest to use is the best! I have settled on MeshCAM as it is compatible with Sketchup (with the addition of the plugin), and is easy to use. Meshcam produces a 'G Code' that can be read by the machine operating software (Mach 3).

MeshCAM requires Windows XP/Vista/Windows 7 and at least 512 MB RAM (2GB Preferred).

Download a FREE 30 day trial from: http://www.grzsoftware.com/std.php. Choose 'save' to save the files to your desktop. Meshcam will install a shortcut on your desktop.

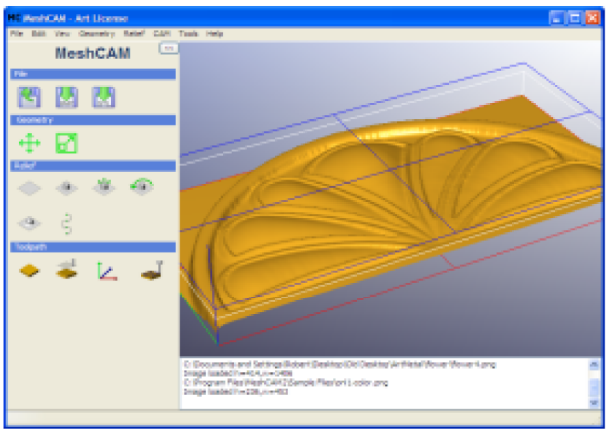

Make and name a new folder on your desktop for the G Codes you create.

Finally the business end of the software!

Artsoft manufacture a program named 'MACH 3' that can convert the G Codes into signal to be sent to your motors.

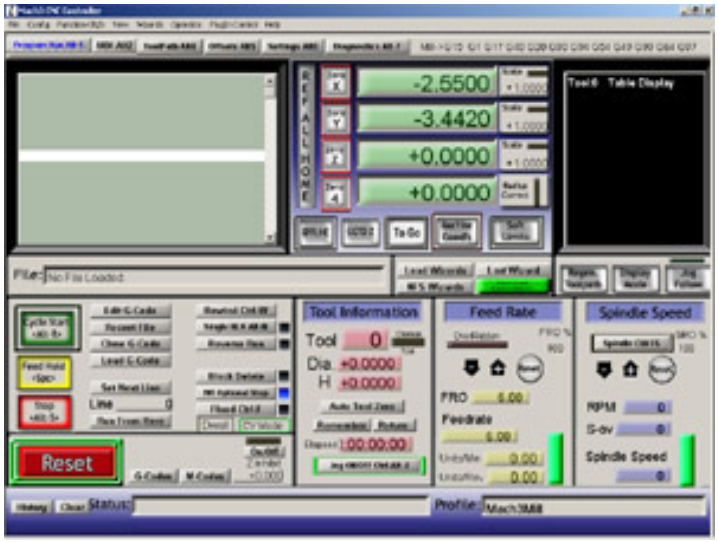

The MACH 3 console above is the control centre of your CNC router. In Mach 3 you can load a G Code and run it. You can configure motors, workbench size and many more options.

Download a FREE limited edition of

- Mach3 R3.043.022

from: http://www.machsupport.com/downloads.php.

1. Draw in google Sketchup

2. Under 'tools', export as a DXF file
3. Open DXF file in Meshcam
4. Set toolpath and save as (G Code) .nc file
5. Load the G Code into MACH 3.

When you hit the program start button the machine will execute the toolpath set. It is highly recommended to connect your power to an emergency stop button!

Perform a dry run before cutting material.

WARNING!!
KEEP HANDS CLEAR, DANGEROUS FORCES AT WORK!